OUTLED L

USER MANUAL

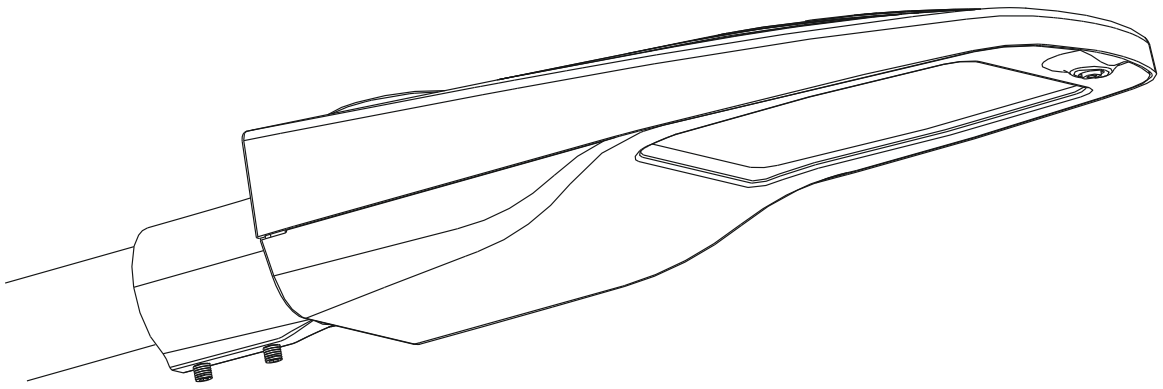

1. The luminaire shall be installed by a qualified electrician and wired in accordance with the latess IEE electrical regulations or the national requirements.
2. No supplied water-proof box, installation should be adviced by qualified professional.
3. The external flexible cable can not be replaced. If the cable is damaged, the luminaire should be discarded.

IMG LIGHTING

Wandsbeker Straße 3-7
Hamburg, Germany
info@img-lighting.com

www.img-lighting.com

Electrical schematic

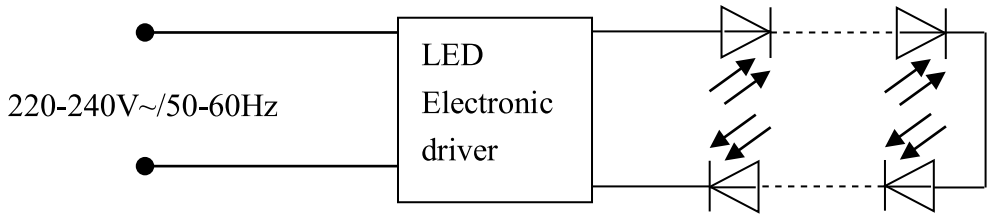

Product dimensions

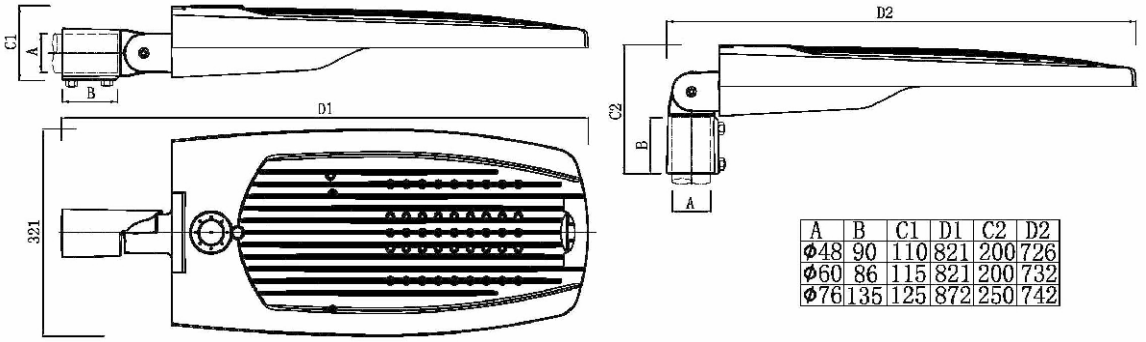

A	B	C1	D1	C2	D2
ø48	90	110	821	200	726
ø60	86	115	821	200	732
ø76	135	125	872	250	742

The max projected area:0.20m²

The max mounting height:10m

Maximum area against wind:0.05m²

Glass size

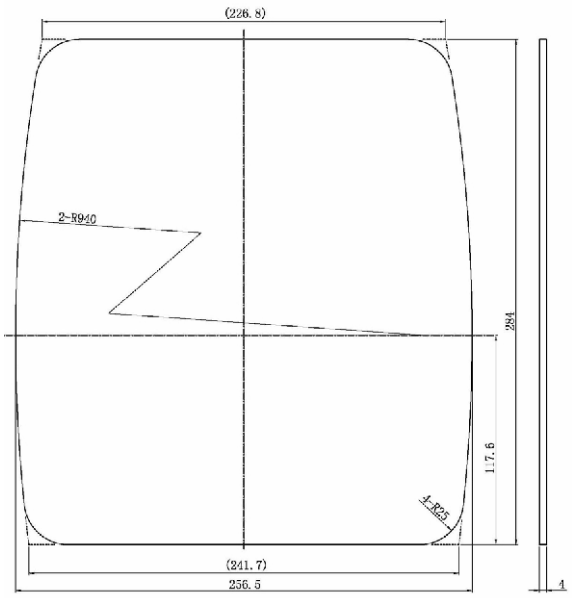

Mounting instruction

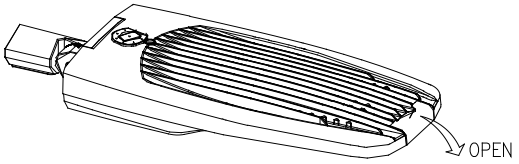

Fig.1 open the lock

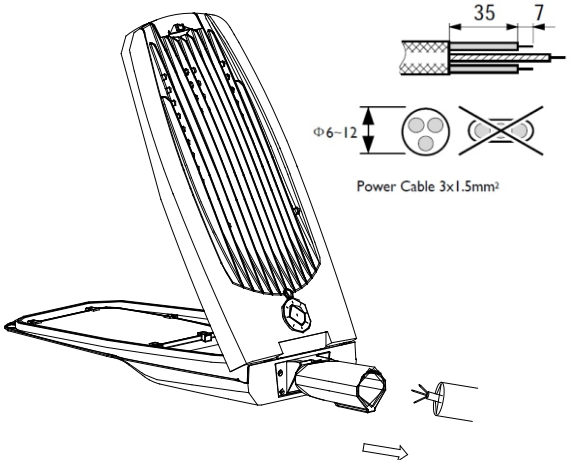

Fig.3 insert into the pole

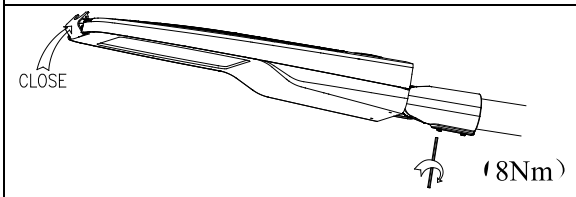

Fig.5 close the lock and screw nuts

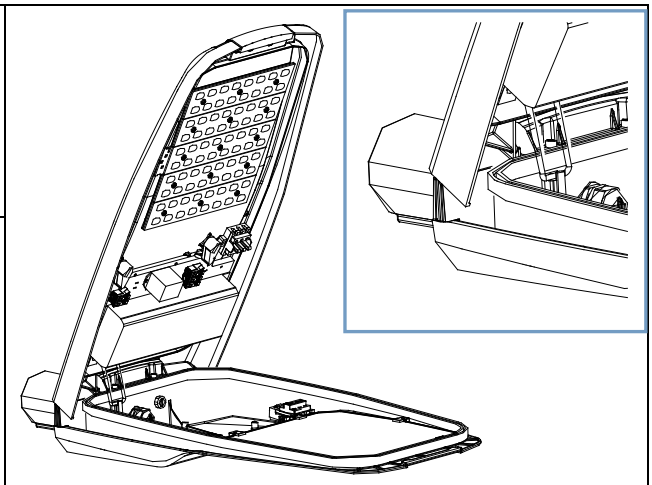

Fig.2 hold up the top cover

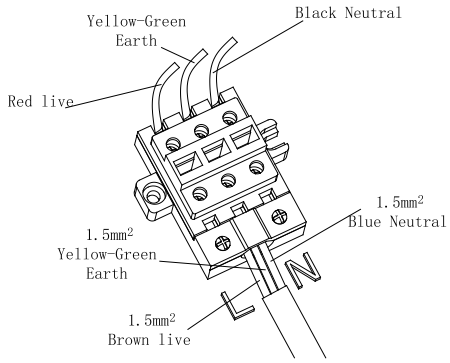

Fig.4 connect the wire

1. The lighting should be placed where is cool, dry, clean and not allowed to be placed in the water or closed to fire resource and high temperature place.
2. To make sure the lighting is intact before it is installed and used . Only the authorized electrician can install the lighting, and the wire should be in line with national standards.
3. To lock the wire's fixed head and the screw on the top cover tightly to make sure the light is waterproof.
4. Don't switch on the power when connecting the wire.
5. Wiring instructions: The power should be connected to binding post inside the junction box, which IP grade should be higher than the lamp's IP grade. And the junction box should have fastened device for the wires.
6. The input cable should be 3 cores and the min cross-sectional area of the conductor should be 1.5 mm^2.The input cable should meet the require of 60245 IEC 57.
7. The thickness of the glass is 4mm.if it is broken, it can be replaced.
8. If the external flexible cable or cord of this luminaire is damaged, it shall be exclusively replaced by the manufacturer or his service agent or a similar qualified person to avoid a hazard.
9. The light source contained in this luminaire shall only be replaced by the manufacturer or his service agent or a similar qualified person.
10. The luminaire should be positioned so that prolonged staring into the luminaire at a distance closer than 261 mm is not expected.

IMG LIGHTING

Wandsbeker Straße 3-7
Hamburg, Germany
info@img-lighting.com

www.img-lighting.com